Architectural Products

US740

Security Frameless Mirror

Revision 03/11

JOB #:

ITEM #:

QUANTITY:

MOUNTING	HANDING	TYPE	SIZE	OTHER

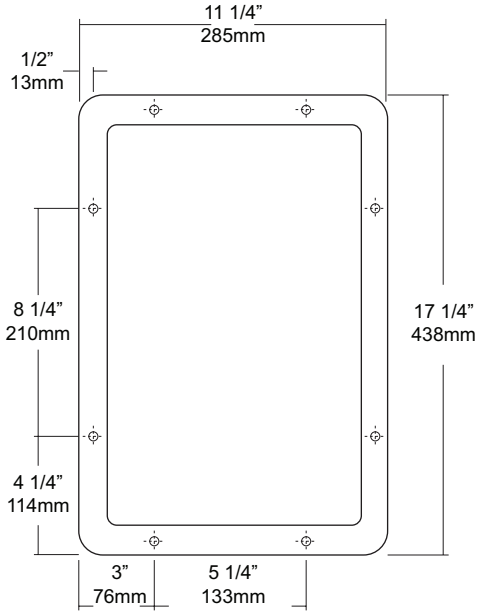

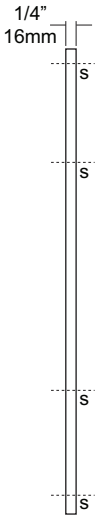

SPECIFICATIONS

Security Mirror: Fabricated of #18 ga stainless steel polished to a #8B finish. All exposed mounting points locations are countersunk. One piece design provides a rigid security mirror that has the appearance of a framed mirror.

Overall Size: 11 1/4”W x 17 1/4”H x 1 /4”D

286mm x 438mm x 6mm

INSTALLATION

Place mirror on wall surface at desired or specified location. Making sure unit is level, transfer all mounting points to mounting surface. Drill pilot holes. Remove all white vinyl protective coating and secure with proper fasteners per application.

NOTES

Formerly Model #: US7408B