Architectural Products

U580

Partition Mounted Sanitary Napkin Disposal

Revision 09/13

JOB #:

ITEM #:

QUANTITY:

MOUNTING	HANDING	TYPE	SIZE	OTHER

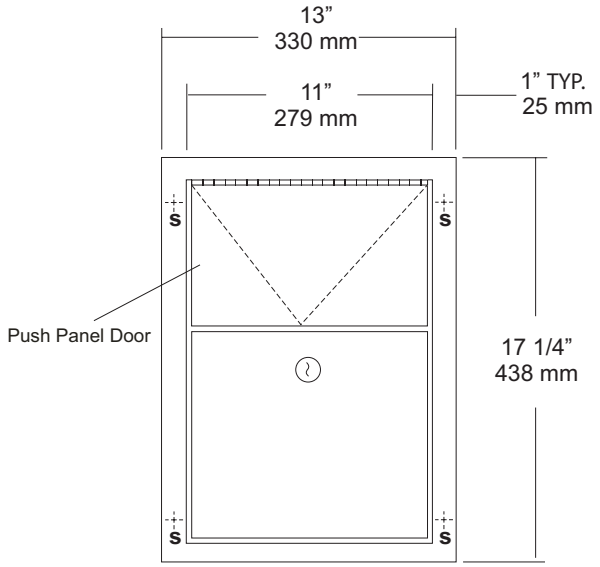

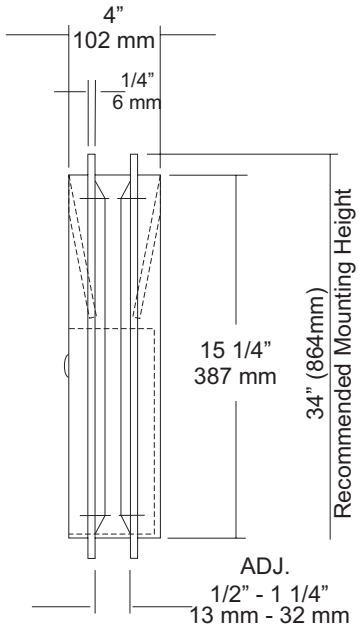

SPECIFICATIONS

Body: Fabricated of #22 ga stainless steel, #4 satin finish.

Flanges: Fabricated of #22 ga stainless steel, drawn one-piece construction with 1/4” returns to wall surface. One flange is welded to body the other is adjustable to fit 1/2” - 1 1/4” thick partitions. (No miters or welds).

Push Panels: Fabricated of #22 ga stainless steel self closing push panel door. *International graphic symbol optional*

Waste: #22 ga stainless steel removable from one side with pin tumbler type lock securing in place. Optional finger grip in lieu of lock

Locks: Pin tumbler locks keyed like all other AJW cabinets.

Hinges: Full length, heavy duty, stainless steel piano type.

Overall Size: 13”W x 17 1/4”H x 4”D

330mm x 438mm x 108mm

Wall Opening: 11 1/2”W x 15 3/4”H

292mm x 400mm

Capacity: 1.5 gallons (.2 cu ft)

NDL-13-50: Waxed disposable liners. (50 per Case)

U580-PW: Same as U580 with plastic removable waste.

INSTALLATION

Provide a rough partition opening 11 1/2”W x 15 3/4”H. Remove adjustable flange and place unit into opening. Secure welded flange to partition at four points making sure unit fits flush and is level. Place adjustable flange over unit and secure to partition the same way as the fixed flange. Be sure the proper fasteners are used for each application.

NOTES

.