AJW Architectural Products	U7018B Series Stainless Steel Frameless Mirror Revision 06/11	JOB #: ITEM #: QUANTITY:

MOUNTING	HANDING	TYPE	SIZE	OTHER

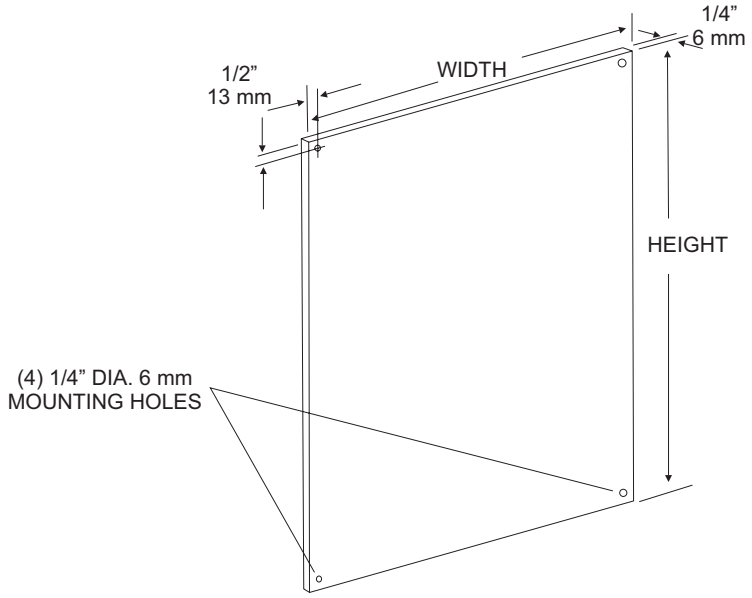

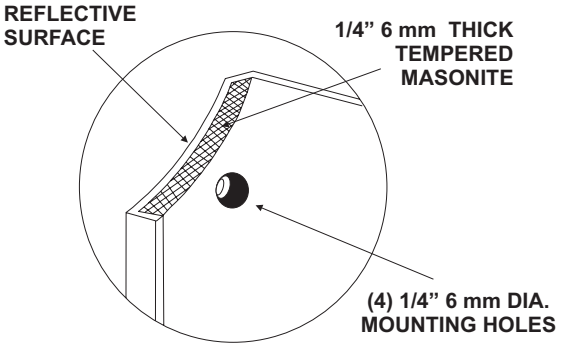

SPECIFICATIONS

Mirror: Type 304 #20 ga stainless steel with #8B architectural finish. Both mirrors have 1/4” returns to wall surface for rigidity surrounding 1/4” thick tempered masonite backing. 1/4” diameter exposed mounting points are provided. Each mirror is shipped with a removable vinyl protective coating.

Note: Stainless steel mirrors reflect images in different optic quality than plate glass. There will be a slight distortion which increases proportionately with the mirror size. Therefore we cannot be held responsible for quality of image.

Cleaning: Non-abrasive and non-chloric solutions should be used to clean stainless steel mirrors.

These Mirrors are always ordered Width x Height

INSTALLATION

Provide an area at desired or specified location and strike a line that is level. Place mirror at this line and check again with level. Transfer mounting locations to wall surface and drill pilot holes. Peel off vinyl coating around corners only before securing to wall. Secure mirror with proper fasteners per each application. Do not over tighten fasteners. If a depression is formed by over-tightening the reflective quality may be affected. Remove remainder of vinyl coating after mirror checks with level and is properly secured. The bottom reflective surface edge must be mounted 40” above finished floor to comply with ADA code, 4.19.6.

NOTES

.